UTM
UNIVERSITI
TEKNOLOGI MALAYSIA

Sekolah Pendidikan
Profesional dan
Pendidikan Berterusan
(SPACE)

JABATAN KEJURUTERAAN ELEKTRIK
PUSAT PENGAJIAN DIPLOMA (PPD), SPACE
UNIVERSITI TEKNOLOGI MALAYSIA
KUALA LUMPUR

DDWE 3711 ELECTRICAL ENGINEERING LABORATORY

(DIGITAL INTERFACING)

EXPERIMENT 2 DIGITAL-TO-ANALOG AND ANALOG-TO-DIGITAL CONVERTERS

EXPERIMENT 2: DIGITAL-TO-ANALOG CONVERTER AND ANALOG-TO-DIGITAL CONVERTER

PART A. Binary Weighted DAC

EQUIPMENTS:

1. Digital Lab Trainer
2. Dual Power Supply (+15V and -15V)
3. 2-39 kΩ resistor
4. 1-741 Linear operational amplifier
5. 1-16 kΩ resistor
6. 1-10 kΩ resistor
7. 1-82 kΩ resistor
8. 1-20 kΩ resistor
9. Data sheet

EXPERIMENT PROCEDURE

Step 1. Assemble the circuit as shown in **Figure 1.**

Step 2. Apply binary inputs as listed in **Table 1** and measured the output voltage, V_{out}. Fill in **Table 1**.

Step 3. Calculate the output voltages of the DAC and compare to the measured values.

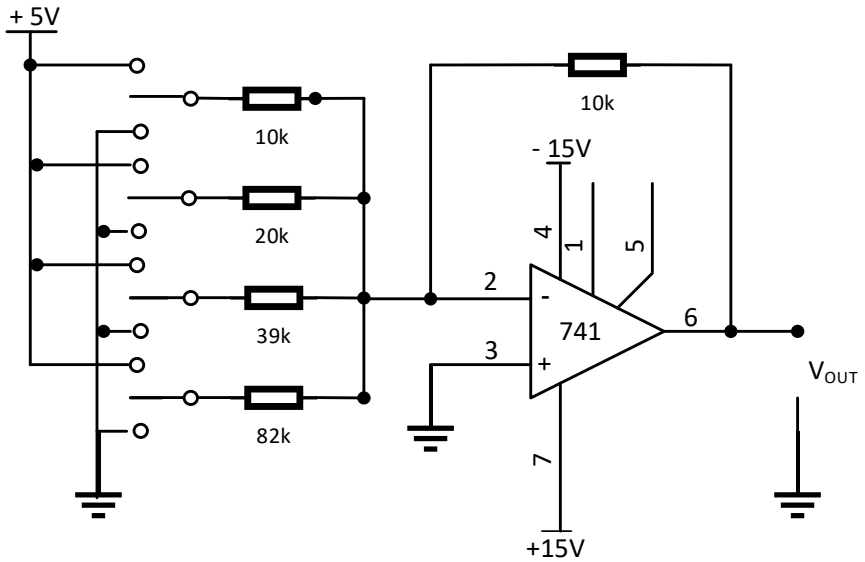

Figure 1

DCBA	V_{OUT}	
Inputs	**Measured**	**Calculated**
0 0 0 0		
0 0 0 1		
0 0 1 1		
0 1 0 1		
1 0 0 0		
1 0 1 1		
1 1 0 0		
1 1 1 1		

Table 1

PART B. Integrated Circuit Digital to Analog Converter

EQUIPMENTS

1. Digital Lab Trainer
2. Dual Power Supply +5 V and - 5 V
3. Dual Power Supply +15 V and -15 V
4. Signal Generator
5. Oscilloscope
6. 1-741 Linear IC
7. 1- DAC 0808 IC
8. 2- 7493 IC
9. 1-10 kΩ, 1 kΩ
10. 2.5 kΩ resistor
11. 3 – 5 kΩ resistor
12. 1- 270 pF Capacitor

EXPERIMENT PROCEDURE

Step 1. Assemble the circuit shown in **Figure 2**

Step 2. Turn on the power supply and apply a clock frequency of 10 kHz to the cascaded counters. Apply 10 V to the reference input (V_{REF})(+), pin 14. Observe the analog output with an oscilloscope as the digital input continuously increases, recycles to zero, and increases again. Draw the output signal in **Figure 2a.**

Step 3. Reduce the reference voltage at pin 14 to 5 V and observe the analog output with the oscilloscope. Draw the output signal in **Figure 2b**.

Step 4. Increase the reference voltage at pin 14 to 10 V and remove the lead at pin 5 of DAC0808, observe the analog output with the oscilloscope. Draw the output signal in **Figure 2c**.

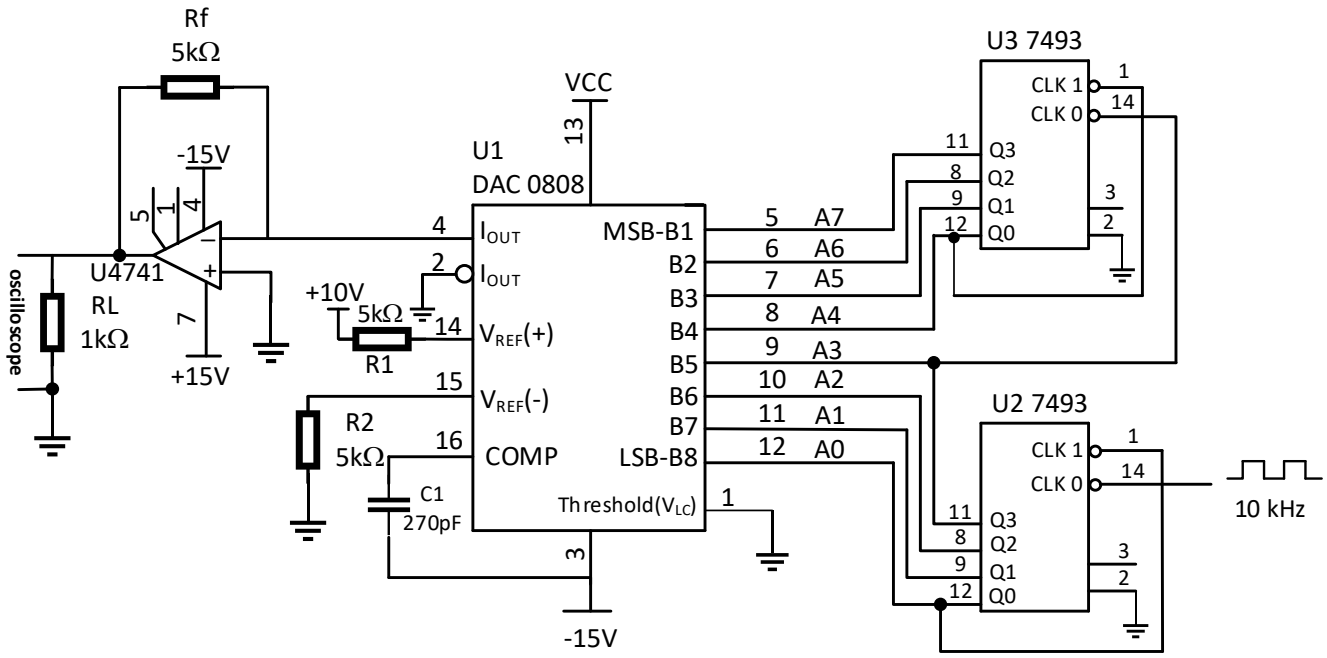

Figure 2

PART C. Integrated Circuit Analog to Digital Converter

EQUIPMENTS

1. Digital Lab Trainer
2. Power Supply, 0-5 V, 12 VDC
3. 1-ADC0804 IC
4. 1- 10 kΩ Potentiometer
5. 1-10 kΩ resistor
6. 1-10 pF Capacitor

EXPERIMENT PROCEDURE

Step 1. Assemble circuit shown in **Figure 3**

Step 2. Connect DB0 to DB7 pins to the LED.

Step 3. Turn on the power supply and push the start switch.

Step 4. Apply the analog input voltage as in **Table 2**. Vary the potentiometer and measured the voltage as required.

Step 5. Fill in **Table 2**, Place 1 and 0 in the column to indicate the corresponding '1' LED turns on, and '0' to indicate LEDs do not light.

Step 6. Add all the resolution values of each column that has a '1'. Place the sum in the column labeled resolution Total.

Step 7. Repeat Steps 5 and 6 of each remaining input analog voltages in **Table 2**.

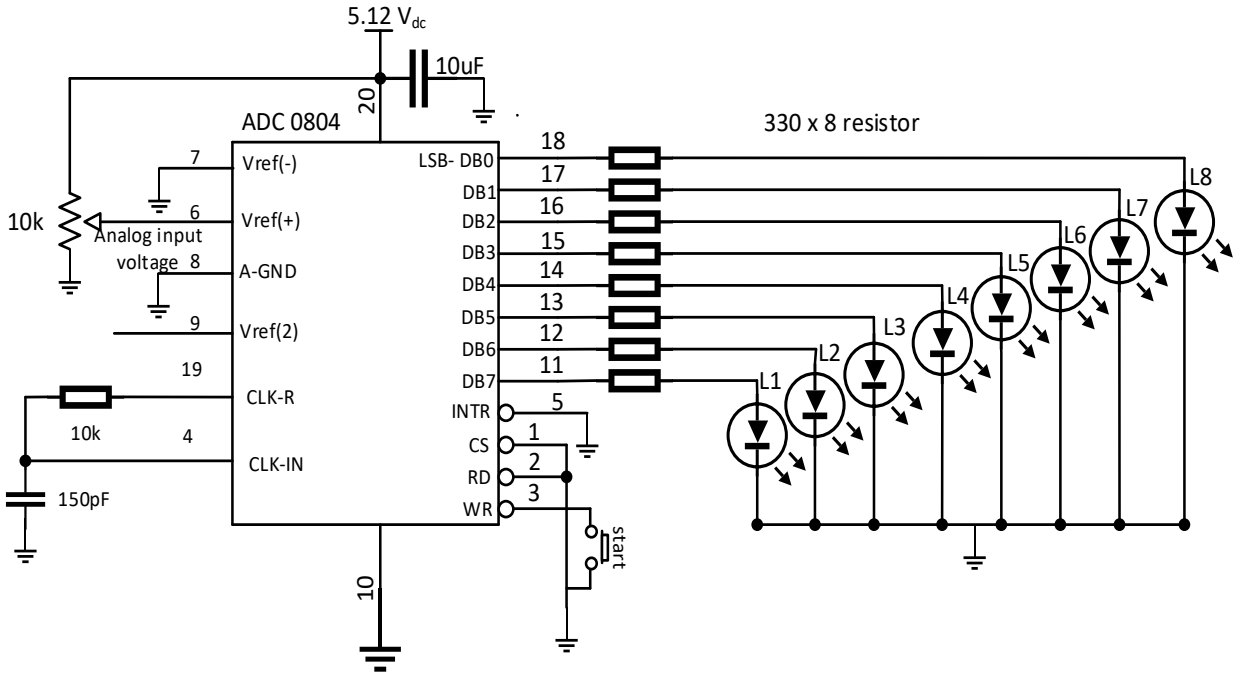

Figure 3