Sekolah Pendidikan Profesional dan Pendidikan Berterusan (SPACE)

PROGRAM KEJURTERAAN ELEKTRIK
PUSAT PENGAJIAN DIPLOMA (PPD), SPACE
UNIVERSITI TEKNOLOGI MALAYSIA
KUALA LUMPUR

MECHATRONICS ENGINEERING LABORATORY

(DDWE 3711)

ELECTRICAL MACHINE AND DRIVES

EXPERIMENT 1

SINGLE PHASE RECTIFIER CIRCUITS

Group members	**1.**
	2.
	3.
	4.
	5.
Lecturer	**:**
Date	**:**

No.	PO	CO	Student Marks	Marks
1	PO1	CO1		40%
2	PO2	CO3		50%
3	PO8	CO6		10%
		Total Marks		/100%

TITLE : SINGLE PHASE RECTIFIER CIRCUITS

OBJECTIVES;

After doing this experiment, you will be able to:

1. Construct half-wave and full-wave rectifier circuits.
2. Identify the output voltage of the half-wave and full-wave rectifier circuits.
3. Calculate the equivalent voltage for the half-wave and full-wave rectifier.
4. Understand the function of uncontrolled and controlled rectifier circuits.

EQUIPMENTS;

1. Lab volt experimental panel
2. Power supply module (8821-2A)
3. Resistive load module (8311-0A)
4. Inductive load module (8321-0A)
5. Power diode module (8842-1A)
6. Data acquisition module (9062-15)
7. Power tyhristors module (8841-2A)
8. Firing tyrhristor unit (9030-30)
9. Desktop

COMPONENTS;

1. Wire jumper

PART A

Single phase : Half-wave rectifier using power diode

Setting up the equipment and procedures;

1. Install the Power supply (8821-2A), resistive load (8311-0A), inductive load (8321-0A), power diode module (8842-1A), and data acquisition module (9062-15).
2. Set up the circuit of Figure 1 using resistive load (8311-0A).

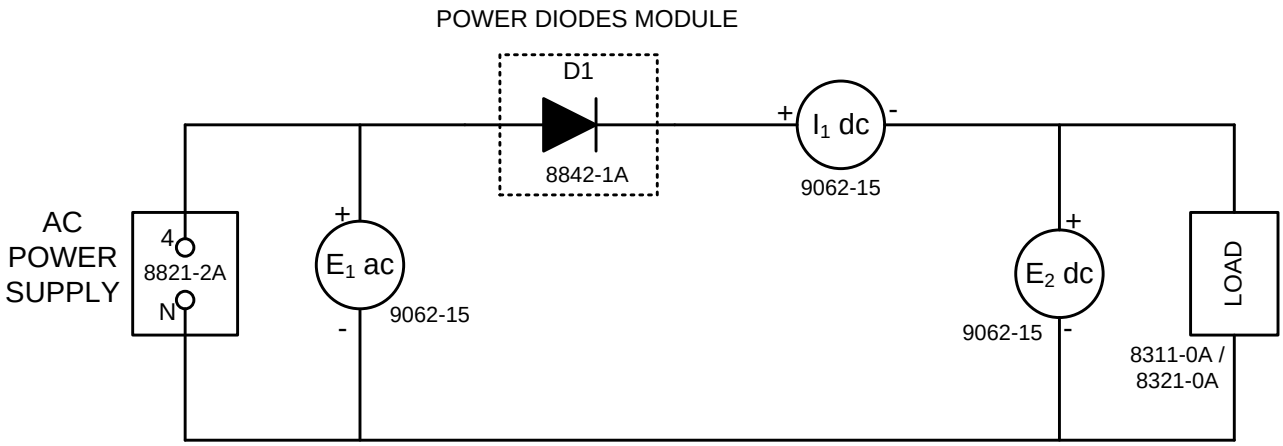

Figure 1

Note;

You will use virtual ammeter and voltmeter throughout the lab session. The lab instructor will show you how to use computer based data acquisition system.

3. Set load, **R = 2400 Ω.**
4. On the power supply, make sure that the voltage control selector is set to the **4-N** position. Switch **ON** the power supply, turn the voltage control knob so that the voltage indicated by the power supply voltmeter is **100 V**.
5. Print or save the voltage and current waveform displayed on the scope (monitor screen). (Y*ou can also print or save the waveform directly from the desktop/computer. Please check with the instructor)*
6. Record the output voltage, current and power of the rectifier in **Table 1**.
7. Set the voltage control knob to the **0** position and switch **OFF** the power supply.
8. Change the load in the circuit to the inductive load (8321-0A). Connect the resistor and inductor in **series** and set up the **R = 2400 Ω** and **L = 7.6 H.**
9. Switch **ON** the power supply, turn the voltage control knob so that the voltage indicated by the power supply voltmeter is **100 V**.

10. Print or save the voltage and current waveform displayed on the scope (monitor screen).
11. Complete the **Table 1**.
12. Set the voltage control knob to the **0** position and switch **OFF** the power supply.

Load	Output Voltage (E_2) (Volt)	Output Current (I_1) (Ampere)	Output power $Po = E_2 \times I_1$ (Watt)
1. Resistive (R=2400 Ω)			
2. Inductive (R=2400 Ω, L=7.6 H)			

Table 1

PO1	CO1	..... /3m

Explain the effect of an inductive load on the voltage and current waveforms.

.....

.....

.....

.....

PO1	CO1	..... /5m

PART B

Single phase : Full wave bridge rectifier using power diode

Setting up the equipment and procedures;

1. Install the Power supply (8821-2A), resistive load (8311-0A), inductive load (8321-0A), power diode module (8842-1A), and data acquisition module (9062-15).
2. Set up the circuit of Figure 2 using resistive load. *To simplify the connecting the power diode set the switch **S1** on the power diodes module to the position **1**.*

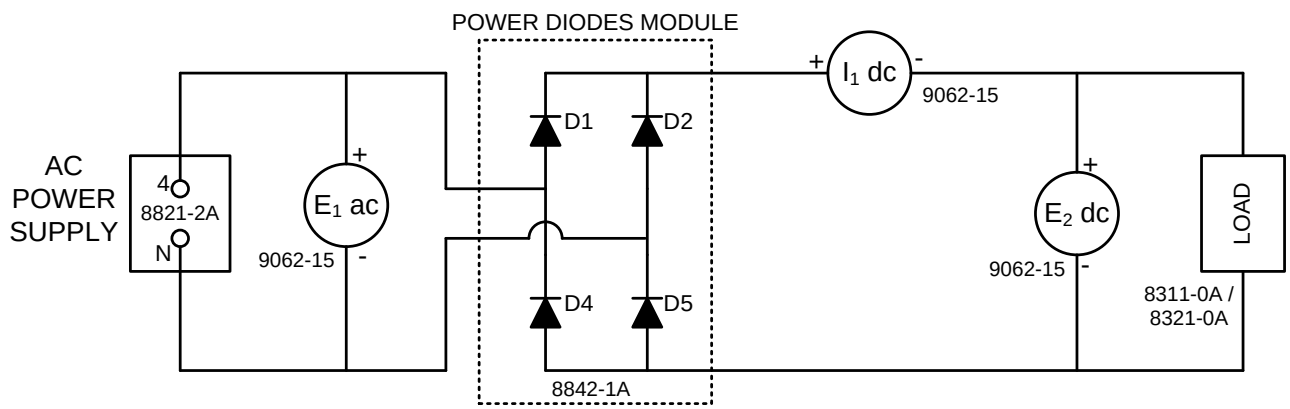

Figure 2

Note;

You will use virtual ammeter and voltmeter throughout the lab session. The lab instructor will show you how to use computer based data acquisition system.

3. Set load, **R = 2400 Ω**.
4. On the power supply, make sure that the voltage control selector is set to the **4-N** position. Switch **ON** the power supply, turn the voltage control knob so that the voltage indicated by the power supply voltmeter is **100 V**.
5. Print or save the voltage and current waveform displayed on the scope (monitor screen).
6. Record the output voltage, current and power of the rectifier in the first row of Table 3.
7. Set the voltage control knob to the **0** position and switch **OFF** the power supply.
8. Change the load in the circuit to the inductive load (8321-0A). Connect the resistor and inductor in **series** and set up the **R = 2400 Ω** and **L = 7.6 H**.

9. Switch **ON** the power supply, turn the voltage control knob so that the voltage indicated by the power supply voltmeter is **100 V**.
10. Print or save the voltage and current waveform displayed on the scope (monitor screen).
11. Complete the **Table 2**.
12. Set the voltage control knob to the **0** position and switch **OFF** the power supply.

Load	Output Voltage (E_2) (Volt)	Output Current (I_1) (Ampere)	Output power $Po = E_2 \times I_1$ (Watt)
1. Resistive (R=2400 Ω)			
2. Inductive (R=2400 Ω, L=7.6 H)			

Table 2

PO1	CO1	..... /3m

What is the effect of the inductive load on the operation of the circuit?

.....

.....

.....

PO1	CO1	..... /5m

Compare the following characteristics of a full wave bridge rectifier to those of a half wave rectifier.

.....

.....

.....

PO1	CO1	..... /5m

Give two difference between a full-wave and half-wave rectifier.

1. .....
   .....
2. .....
   .....

PO1	CO1	..... /5m

PART C

Single phase : Full wave rectifier using power thyristor

Setting up the equipment and procedures;

1. Install the Power supply (8821-2A), resistive load (8311-0A), inductive load (8321-0A), power diode module (8842-1A), power tyhristors module (8841-2A) and data acquisition module (9062-15).
2. Set up the circuit of Figure 3 using the resistive load. *To simplify connecting the thyristors, set both interconnection switches* ***(S_1 & S_2)*** *on the power thyristors module to the* ***1*** *position.*
3. Set **R = 2400 Ω.**

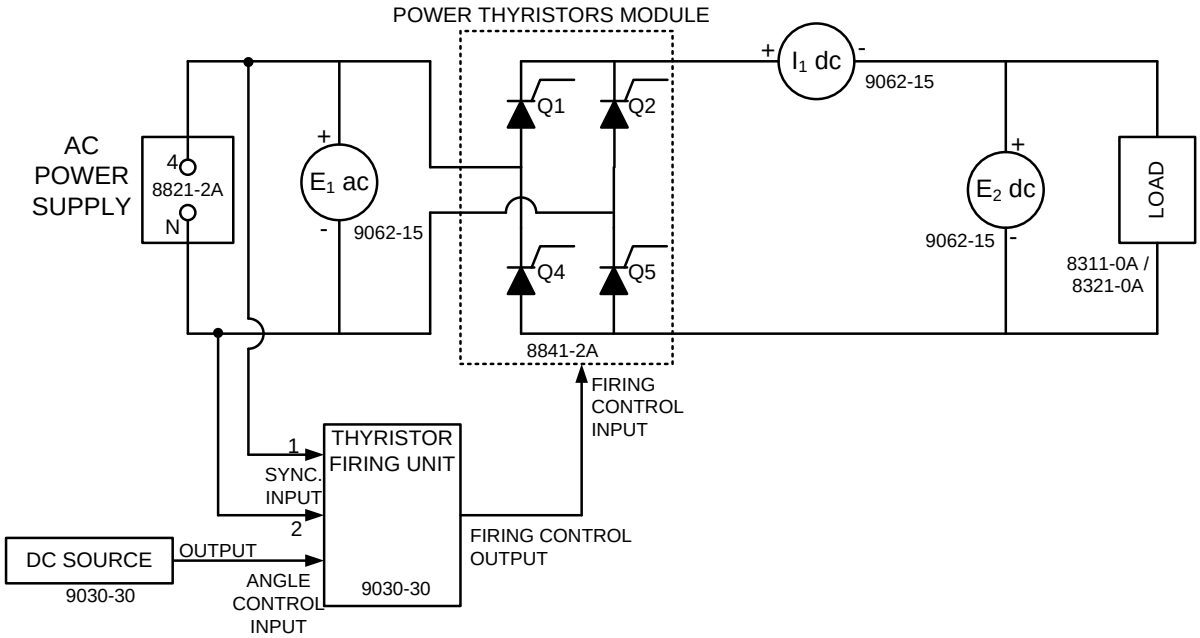

Figure 3

4. Make the **following settings;**

On the power supply

Voltage selector	-----	4 – N

On the Thyristor Firing Unit

ANGLE CONTROL COMPLEMENT	-----	0
ANGLE CONTROL ARC COSINE	-----	0
FIRING CONTROL MODE	-----	1~
DC SOURCE	-----	MIN

Note;

You will use virtual ammeter and voltmeter throughout the lab session. The lab instructor will show you how to use computer based data acquisition system.

5. On the power supply, make sure that the voltage control selector is set to the **4-N** position. Switch **ON** the power supply, turn the voltage control knob so that the voltage indicated by the power supply voltmeter is **100 V**.
6. On the thyristor firing unit, set the firing angle and record the result in **Table 3.**
7. Print or save the voltage and current waveform displayed on the scope (monitor screen) for the firing angle **0°, 40°** and **100°.**

Resistive Load (R=2400 Ω)

Firing Angle (°)	Output Voltage (E_2) (Volt)	Output Current (I_1) (Ampere)	Output power $Po = E_2 \times I_1$, W
0°			
10°			
20°			
40°			
60°			
80°			
100°			

Table 3

PO1	CO1	..... /3m

8. Set the voltage control knob to the **0** position and turn **OFF** the power supply.
9. Change the load in the circuit to the inductive load (8321-0A). Connect the resistor and inductor in **series** and set up the **R = 2400 Ω** and **L = 7.6 H.**
10. Switch **ON** the power supply, turn the voltage control knob so that the voltage indicated by the power supply voltmeter is **100 V**.
11. On the thyristor firing unit, set the firing angle and record the result in **Table 4.**
12. Print or save the voltage and current waveform displayed on the scope (monitor screen) for the firing angle **0°, 40°** and **100°.**
13. Set the voltage control knob to the **0** position and switch **OFF** the power supply.

Inductive Load (R=2400 Ω, L=7.6 H)

Firing Angle (°)	Output Voltage (E_2) (Volt)	Output Current (I_1) (Ampere)	Output power $Po = E_2 \times I_1$, W
0°			
10°			
20°			
40°			
60°			
80°			
100°			

Table 4

PO1	**CO1**	**..... /3m**

What is the difference between this rectifier circuit and the full wave rectifier circuit seen in PART B?

.....

.....

.....

PO1	**CO1**	**..... /5m**

14. Add a **free wheeling diode (FWD)** to the circuit, as shown in **Figure 5**.

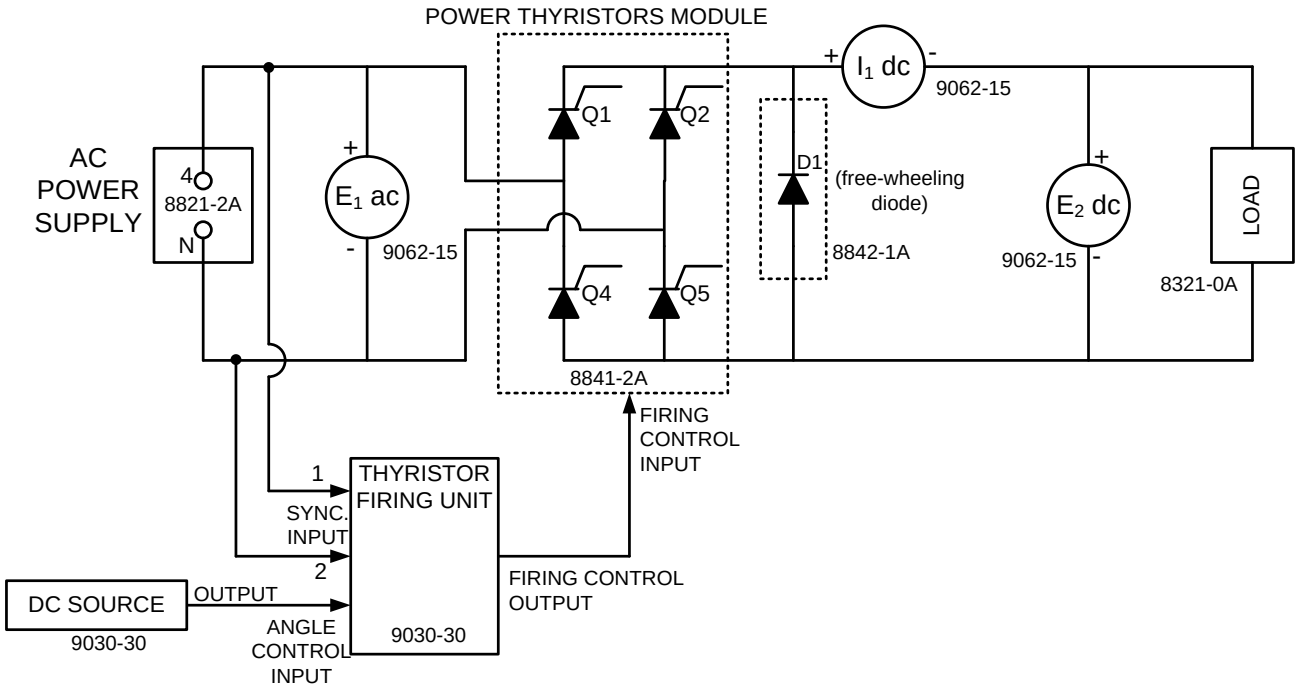

Figure 5

15. Set inductive load. Connect the resistor and inductor in **series** and set up the **R = 2400 Ω** and **L = 7.6 H**.
16. Switch **ON** the power supply, turn the voltage control knob so that the voltage indicated by the power supply voltmeter is **100 V**.
17. On the thyristor firing unit, set the firing angle and record the result in **Table 5.**
18. Print or save the voltage and current waveform displayed on the scope (monitor screen) for the firing angle **0°, 40°** and **100°.**
19. Set the voltage control knob to the **0** position and switch **OFF** the power supply.

Inductive Load (R=2400 Ω, L=7.6 H) with FWD

Firing Angle (°)	Output Voltage (E_2) (Volt)	Output Current (I_1) (Ampere)	Output power $Po = E_2 \times I_1$, W
0°			
10°			
20°			
40°			
60°			
80°			
100°			

Table 5

PO1	CO1	..... /3m

What effect does the free wheeling diode have on the operation of the circuit?

.....
.....
.....

PO1	CO1	..... /5m

CONCLUSION

.....
.....
.....
.....
.....
.....

PO1	CO1	..... /5m

TOTAL MARKS (PO1, CO1) = ... / 50 marks