UTM
UNIVERSITI
TEKNOLOGI MALAYSIA

Sekolah Pendidikan
Profesional dan
Pendidikan Berterusan
(SPACE)

JABATAN KEJURUTERAAN ELEKTRIK
PUSAT PENGAJIAN DIPLOMA (PPD), SPACE
UNIVERSITI TEKNOLOGI MALAYSIA
KUALA LUMPUR

DDWE 3711 ELECTRICAL ENGINEERING

LABORATORY

(INDUSTRIAL ELECTRONICS)

EXPERIMENT 2 OSCILLATOR AND ASTABLE MULTIVIBRATOR

OBJECTIVE

To understand the operation of a Wein-Bridge oscillator and astable multivibrator circuit.

Learning Outcomes

At the end of the experiment, students must be able to:

Construct the circuits correctly from the schematic drawings given.
Use the oscilloscope to display the waveforms and to measure the parameters.
Sketch and label the waveforms.
Record the results obtained from the experiment.
Understand the operations of the circuits.
Verify the theory of the circuits.

List of Equipment and Components

Equipment

Oscilloscope
DC power supply
Digital / Analog Multimeter
Proto Board

Components

Resistors 1/2 W	:	100 Ω (1), I kΩ (2), 10 kΩ (2), 100 kΩ (1)
Variable resistor	:	I k Ω (1)
Capacitor	:	0.l pF (2), 0.2 pF (1), 0.0l pF (2)

Op-Amp 741 (1)
Timer 555 (1)

Part A: Wien-Bridge Oscillator circuit

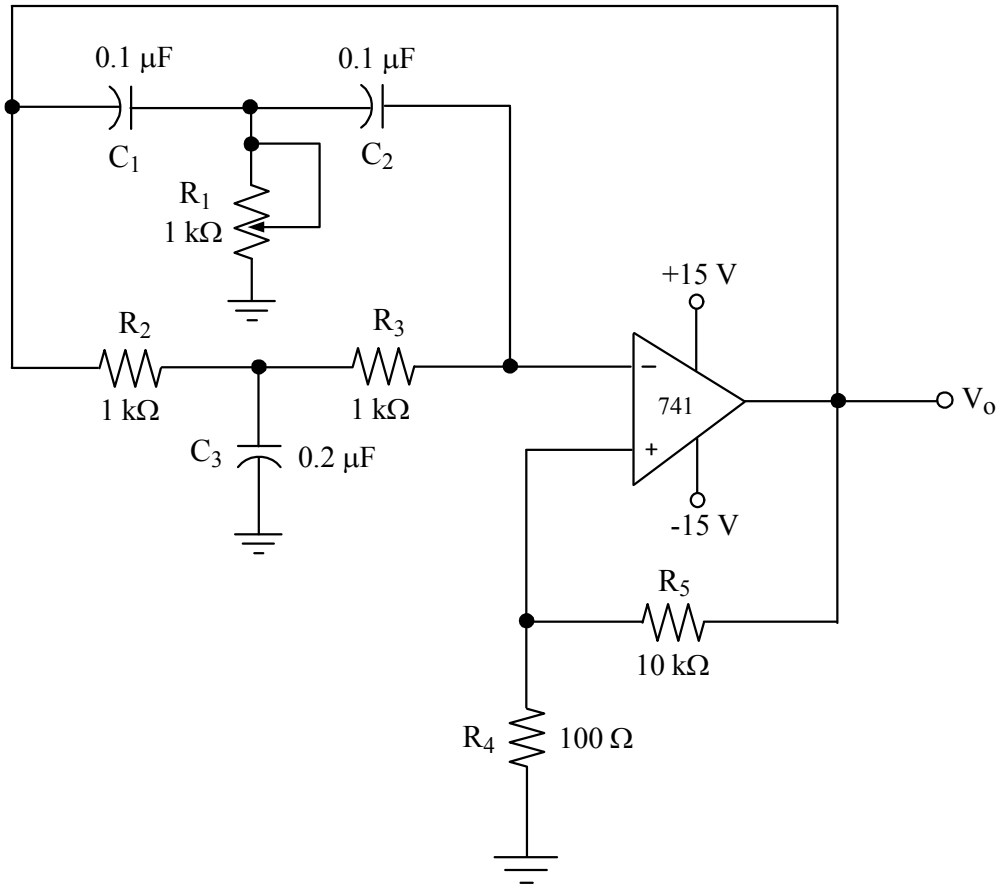

Figure 1

1. Connect the circuit as in Figure 1. Connect the oscilloscope at the output terminal, V_O.
2. Vary the potentiometer, R_1 to get a sinusoidal output waveform, V_O.
3. Measure the period, T and the frequency, f_O of the output waveform and record in Table 1.
4. Sketch the output waveform, V_O according to scale.

Part B: Astable Multivibrator using 555 Timer

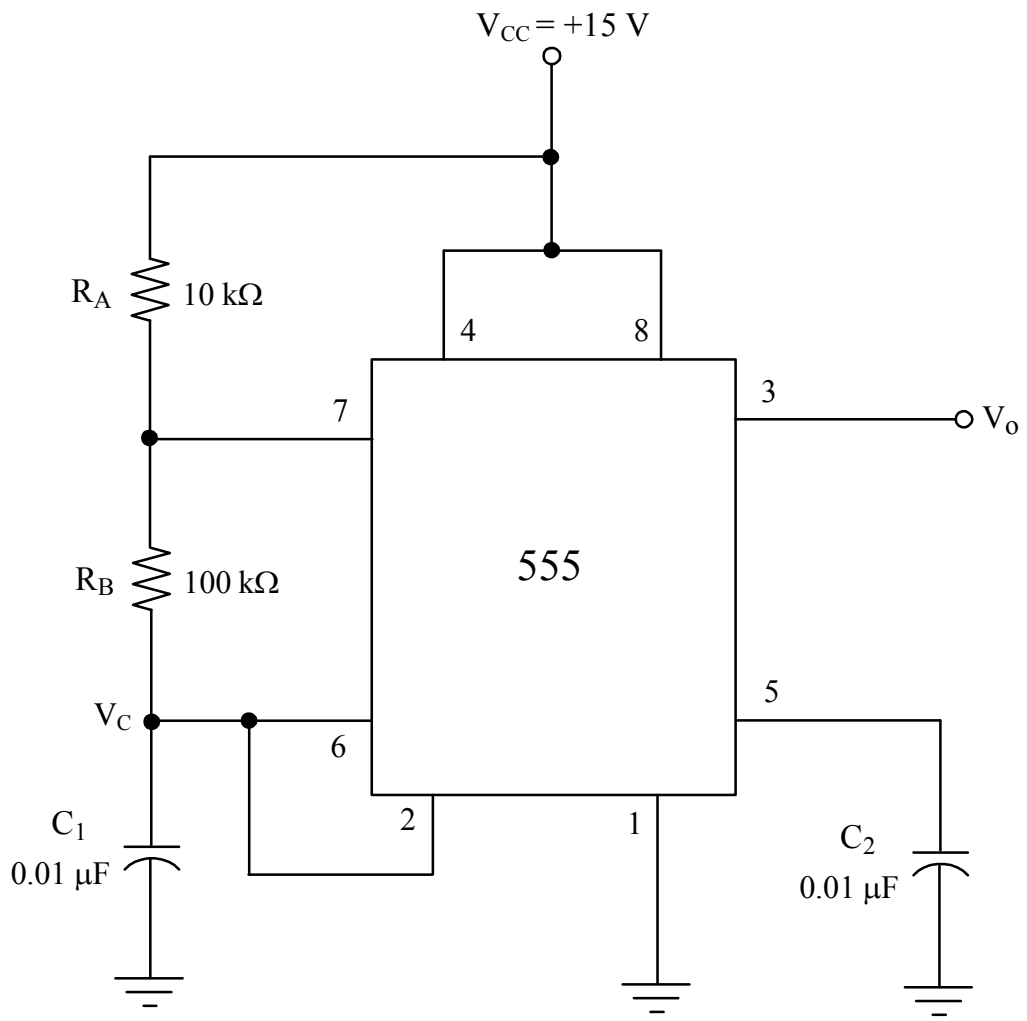

Figure 2

1. Connect the circuit as in Figure 2. Connect CH 1 of the oscilloscope at V_C and CH 2 at V_O terminal.
2. Measure the frequency (f_O) and duty-cycle (DC) of the waveform, Vo. Record the results in Table 2.
3. Sketch the waveforms, V_C and V_O in relation to each other according to the scale.
4. Repeat procedure 1 to 3 for different values of R_A and R_B according to the values in Table 2.

UTM UNIVERSITI TEKNOLOGI MALAYSIA

Sekolah Pendidikan Profesional dan Pendidikan Berterusan (SPACE)

JABATAN KEJURUTERAAN ELEKTRIK
PUSAT PENGAJIAN DIPLOMA (PPD), SPACE
UNIVERSITI TEKNOLOGI MALAYSIA
KUALA LUMPUR

DDWE 3711 ELECTRICAL ENGINEERING LABORATORY
(INDUSTRIAL ELECTRONICS)

REPORT SHEET 2
OSCILLATOR AND ASTABLE MULTIVIBRATOR

Group members	**1.**
	2.
	3.
Lecturer	**:**
Date	**:**

No.	PO	CO	Student marks	Marks
1	PLO1	CLO5		40%
2	PLO2	CLO5		40%
3	PLO4	CLO5		10%
4	PLO8	CLO5		10%
Total marks				100%

EXPERIMENT 1: OSCILLATOR AND ASTABLE MULTIVIBRATOR

PART A

	Calculated	Measured	% Error
Frequency (Hz)			

Table 1

PLO1	CLO5	..... / 3 m

Waveform

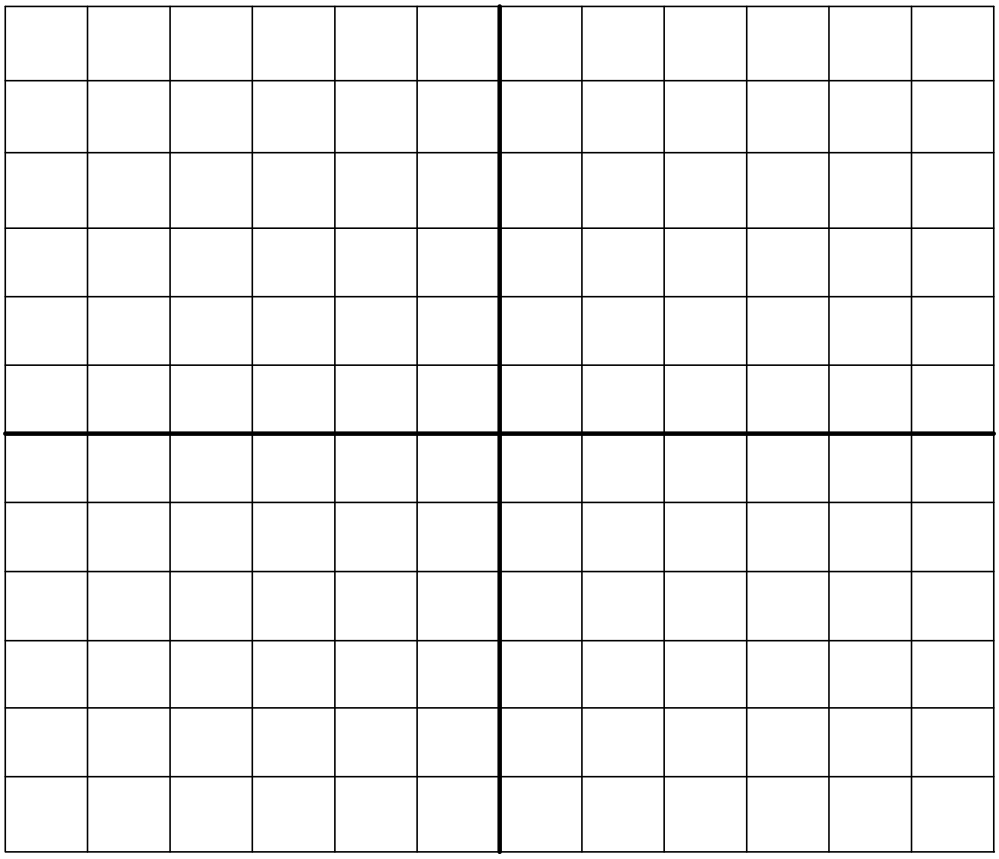

PLO1	CLO5	..... / 2 m

PART B

R_A (kΩ)	R_B (kΩ)	f_O Calculated	f_O Measured	DC Calculated	DC Measured	% Error f_O	% Error DC
10	100						
100	10						
10	10						

Table 2

PLO1	CLO5	..... / 8 m

R_A = 10 kΩ, R_B = 100 kΩ

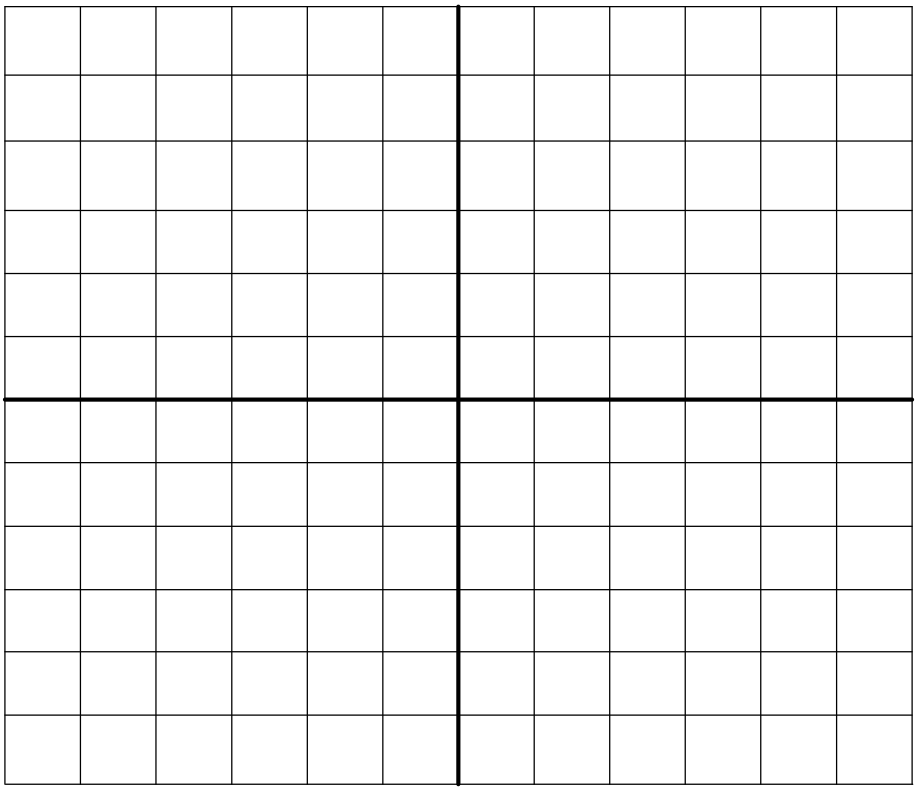

PLO1	CLO5	..... / 4 m

R_A = 100 kΩ, R_B = 10 kΩ

PLO1	CLO5	..... / 4 m

R_A = 10 kΩ, R_B = 10 kΩ

PLO1	CLO5	..... / 4 m

DISCUSSIONS AND CONCLUSIONS

1. How does oscillation frequency related to the components of the circuit in Part A.

_____
_____
_____
_____
_____
_____
_____

PLO1	CLO5	..... / 3 m

2. What is the main factor that influence the Duty Cycle (DC), the oscillation frequency (f_O) of an astable multivibrator in Part B.

_____
_____
_____
_____
_____
_____
_____
_____

PLO1	CLO5	..... / 4 m

3. How do the practical result differ from the calculated and simulated result? Give possible reasons that contributed to errors?

_____

_____

_____

_____

_____

_____

_____

PLO1	CLO5	..... / 3 m

4. Give a conclusion based on the experiments **OSCILLATOR AND ASTABLE MULTIVIBRATOR.**

_____

_____

_____

_____

_____

_____

_____

_____

_____

PLO1	CO5	..... /5 m

PLO2 (Psychomotor/Hands on Skill)

Criteria	Very poor (5 Marks)	Poor (10 Marks)	Moderate (15 Marks)	Good (20 Marks)	Excellent (25 Marks)
Ability to perform lab works based on the manual/ guidelines provided	Not at all	Quite Limited /Selectively	Can perform lab work moderately but require a lot of guidance	Can perform lab work systematically and only need minor guidance	Demonstrate systematic and excellent performances
Ability to perform simple lab work without supervision	Need full supervision	Major supervision	Minor supervision	Limited supervision	Work independently With no supervision
Ability to carry out lab work efficiently on the following criteria, (circuit assembly, using measurement apparatus and techniques)	Not able to construct a full circuit, poor/inaccurate measurement techniques/usage of equipment	Completed full circuit but poor/inaccurate measurement techniques/usage of equipment	Completed full circuit and it works successfully. However the measurement techniques/usage of equipment had some minor deficiency	Completed full circuit and it works successfully. However the measurement techniques/usage of equipment had produced a few errors/corrections.	Circuit was completed and works properly without any errors /corrections. Also demonstrated an excellent skills/conducts.
Ability to collect the required data, performs appropriate analysis and/or troubleshooting (if necessary).	Not able to collect data and/or perform analysis	Limited data collection but not able to perform analysis/ troubleshooting	Demonstrates major errors in data collection and /or analysis. Limited ability in troubleshooting	Minor error in data collection and analysis. Good approach/techniques in troubleshooting.	Data collection and data analysis are done systematically and performs excellent approaches to trouble shoot (if necessary)

PLO4 for Laboratory Report

Criteria	VERY POOR (5)	POOR (10)	MODERATE (15)	GOOD (20)	EXCELLENT (25)
Data Collection	No data reported.	Data is brief and missing significant pieces of information .	Incomplete these of components of data (Both tables and Graphs): • _____Tables • _____Graphs	Only one component of data is incomplete (either table or graph). • Tables/Graphs	Data is completed properly and attributes mentioned below are observed with great care: • Tables are easy to read and units are provided. • Graphs are labeled and shown trends.
Completing/ Answering Questions	Questions are not answered at all.	Attempts were made but gave wrong answer to every question.	Questions are answered without any depth and with many errors.	Questions are properly answered but with a few errors.	Questions are answered completely and correctly.
Summary/ Conclusion	No conclusion or summary is/are drawn/reported	Conclusion is too brief without any reference to important pieces of information	Any two components of the conclusion/summary (mentioned) are missing : • Summary • Data • Hypothesis • Errors	Any component of the conclusion /Summary (mentioned) is missing: • Summary • Data • Hypothesis • Errors	Conclusion /Summary of these attributes below were addressed/reported properly, clearly and systematically. • experiment, • data cited • hypothesis/assumptions made • The source of errors.
Report Quality	No attention to detail evident.	Report contains many errors.	Report is good but with few spelling or grammatical errors.	Report is well written and cohesive, with a few errors	Report is very well written without any spelling or grammatical mistakes.

PLO8

Criteria	Very poor (5 Marks)	Poor (10 Marks)	Moderate (15 Marks)	Good (20 Marks)	Excellent (25 Marks)
Professional Practice (Punctuality/Follow the Rules)	Non-Conforming/ Not punctual	Not always Conforming/ Not always punctual	Sometimes Conforming/ Sometimes punctual	Conforming /Punctual	Always Conforming /Always Punctual
Ethical Conduct/Behaviour (Trustworthy / Respectfulness)	Does not practice	Not always practicing	Sometimes only	Mostly practicing	Always practicing
Social Cultural (Racial Harmony)	Does not observe	Not always observe	Sometimes observe	Mostly observe	Always observe
Personality	Mostly unpleasant	Not always pleasant	Moderately pleasant	Mostly pleasant	Always pleasant