UTM
UNIVERSITI
TEKNOLOGI MALAYSIA

Sekolah Pendidikan
Profesional dan
Pendidikan Berterusan
(SPACE)

JABATAN KEJURUTERAAN ELEKTRIK
PUSAT PENGAJIAN DIPLOMA (PPD), SPACE
UNIVERSITI TEKNOLOGI MALAYSIA
KUALA LUMPUR

DDWE 3711 ELECTRICAL ENGINEERING

LABORATORY

(INDUSTRIAL ELECTRONICS)

EXPERIMENT 3

SCR PHASE CONTROL CIRCUITS

OBJECTIVE

To understand the operation of the SCR as a power control device.

Learning Outcomes

At the end of the experiment, students must be able to:

Test SCR using a multi-meter.
Connect a circuit from the schematic drawing given.
Use the oscilloscope to display the waveforms from the circuit.
Sketch and label the waveforms across the SCR and load from a circuit.
Identify the triggering and conduction angle.
Make a record of the results obtained from the experiment.

List of Equipment and Components

Oscilloscope
SCR
Bulb
1 Ω 5 W resistor
4.7 kΩ resistor
1 kΩ potentiometer
1 μF capacitor
10 μF capacitor

METHODS

PART A: Identifying the terminals of the SCR

Refer to SCR data sheet:

1. Determine the SCR terminals: anode, cathode and gate.
2. Sketch the physical structure of the SCR and label the terminals.

PART B: Testing the SCR

1. With the multimeter in the highest ohm range. Connect the positive terminal of the meter to the anode and negative terminal to the cathode.
    a. With the gate open, measure and record the resistance of the SCR.
    b. Short the gate to the anode, measure and record the resistance of the SCR.
2. Reverse the connections of the meter, with the anode to the negative and cathode to the positive.
    a. With the gate open, measure and record the resistance of the SCR.
    b. Short the gate to the anode, measure and record the resistance of the SCR.

PART C: 90° Phase Control Circuit

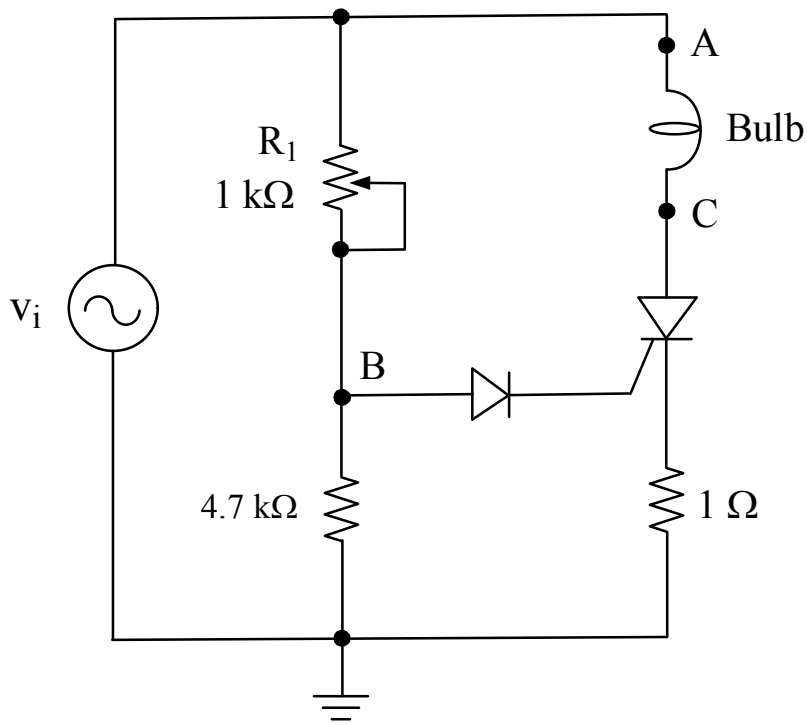

Figure 1

1. Construct the circuit as in Figure 1. $V_{in} = 6\ V_p$.
2. Connect CHI of the oscilloscope to point A and CH2 to point B.
3. Vary the 1 kΩ potentiometer, observe the variation of the voltage waveforms of point A and B and the variation of the brightness of the lamp.
4. Set the potentiometer so that the SCR is triggering at the minimum firing angle.
    a. Sketch and label the waveform of point A and B.
    b. Calculate the minimum firing angle.
    c. Measure the resistance of the potentiometer.
    d. Connect CHI of the oscilloscope to point A and CH2 to point C. Sketch and label the waveform of point A and C.
5. Repeat step 4 for the maximum firing angle.
6. Compare the results of waveforms obtained from the experiment.

PART C: 180° Phase Control Circuit

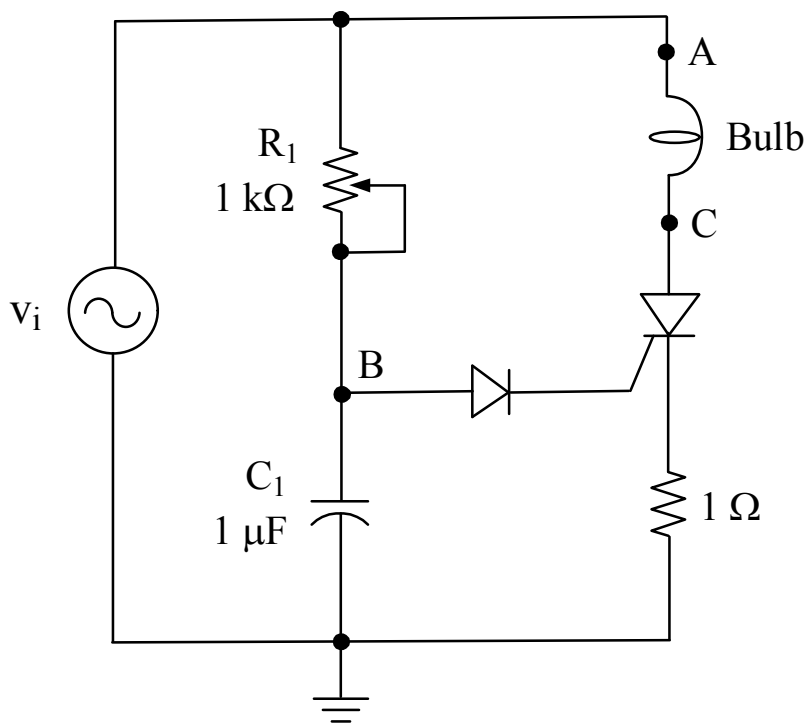

Figure 2

1. Construct the circuit as in Figure 2. $V_{in} = 6\ V_p$.
2. Connect CHI of the oscilloscope to point A and CH2 to point B.
3. Set the potentiometer so that the SCR is triggering at the minimum firing angle.
    a. Sketch and label the waveform of point A and B.
    b. Calculate the minimum firing angle.
    c. Measure the resistance of the potentiometer.
    d. Connect CHI of the oscilloscope to point A and CH2 to point C. Sketch and label the waveform of point A and C.
4. Repeat step 3 for the maximum firing angle.
5. Compare the results of waveforms obtained from the experiment.
6. Change C = 10 μf and repeat Step 3 and Step 4.

UTM UNIVERSITI TEKNOLOGI MALAYSIA

Sekolah Pendidikan Profesional dan Pendidikan Berterusan (SPACE)

JABATAN KEJURUTERAAN ELEKTRIK
PUSAT PENGAJIAN DIPLOMA (PPD), SPACE
UNIVERSITI TEKNOLOGI MALAYSIA
KUALA LUMPUR

DDWE 3711 ELECTRICAL ENGINEERING LABORATORY
(INDUSTRIAL ELECTRONICS)

REPORT SHEET 3
SCR PHASE CONTROL CIRCUITS

Group members	**1.**
	2.
	3.
Lecturer	**:**
Date	**:**

No.	PO	CO	Student marks	Marks
1	PO1	CO5		60%
2	PO2	CO5		20%
3	PO4	CO5		10%
4	PO8	CO5		10%
Total marks				100%

EXPERIMENT 1: SCR PHASE CONTROL CIRCUITS

PART A: Identifying the terminals of the SCR

Sketch the physical structure of the SCR and label the terminals.

PLO1	CLO5	..... / 2 m

PART B: Testing the SCR

1. With the multimeter in the highest ohm range. Connect the positive terminal of the meter to the anode and negative terminal to the cathode.
    a. With the gate open, measure and record the resistance of the SCR.

    _____

    b. Short the gate to the anode, measure and record the resistance of the SCR.

    _____

2. Reverse the connections of the meter, with the anode to the negative and cathode to the positive.
    a. With the gate open, measure and record the resistance of the SCR.

    _____

    b. Short the gate to the anode, measure and record the resistance of the SCR.

    _____

PLO1	CLO5	..... / 2 m

PART C: 90° Phase Control Circuit

Vary the 1 kΩ potentiometer, observe the variation of the voltage waveforms at point A and B and the variation of the brightness of the lamp. State the observation.

_____

_____

_____

_____

PLO1	CLO5	..... / 2 m

Minimum firing angle (Calculated)	Resistance of potentiometer (kΩ) (Measured)

Table 1

PLO1	CLO5	..... / 1 m

Sketch and label the waveform of point A and B **(Minimum firing angle)**

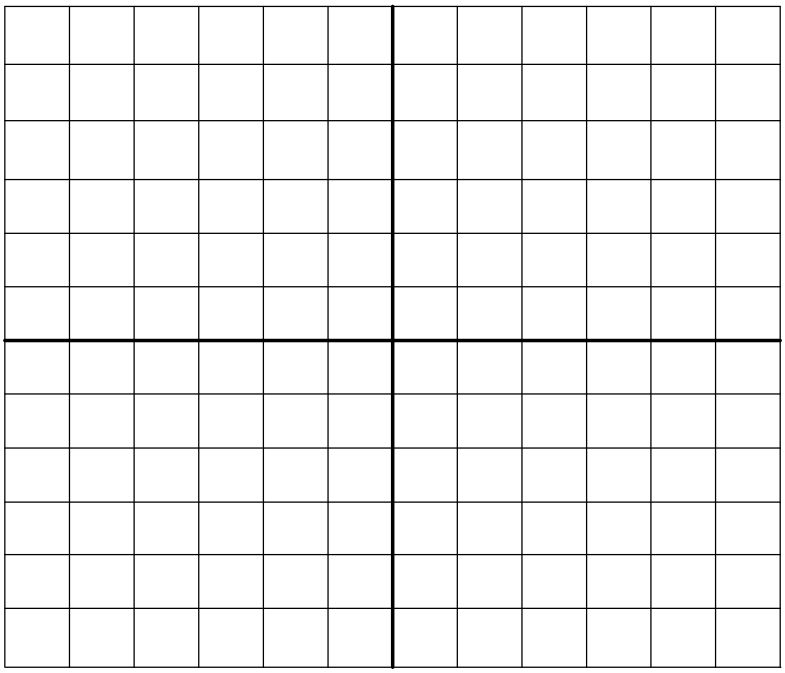

Figure 1

PLO1	CLO5	..... / 3 m

Sketch and label the waveform of point A and C **(Minimum firing angle)**

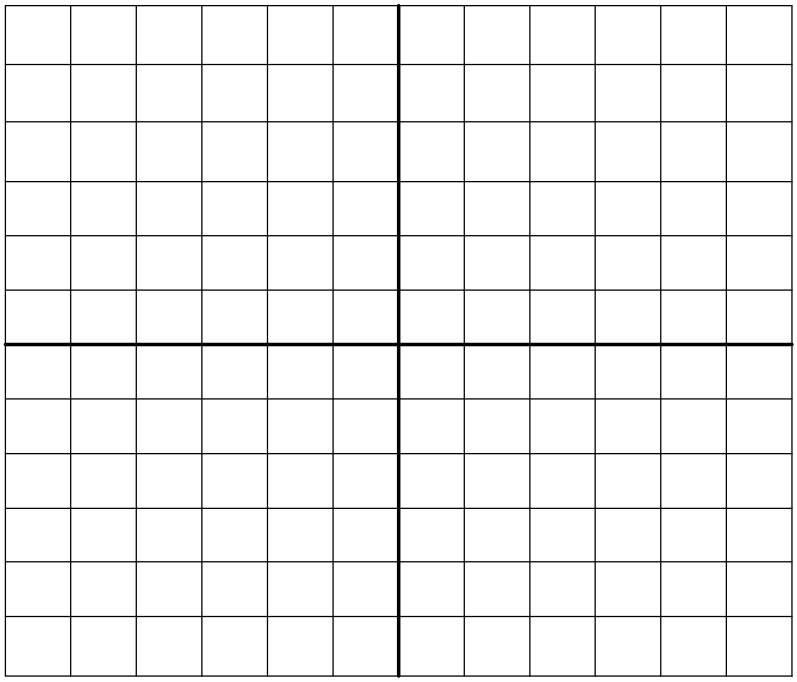

Figure 2

PLO1	CLO5	..... / 2 m

Compare and write a conclusion based on the result of **Table 1, Figure 1** and **Figure 2.**

_____

_____

_____

_____

_____

_____

_____

PLO1	CLO5	..... / 3 m

Maximum firing angle (Calculated)	Resistance of potentiometer (kΩ) (Measured)

Table 2

PLO1	CLO5	..... /1 m

Sketch and label the waveform of point A and B **(Maximum firing angle)**

Figure 3

PLO1	CLO5	..... / 3 m

Sketch and label the waveform of point A and C **(Maximum firing angle)**

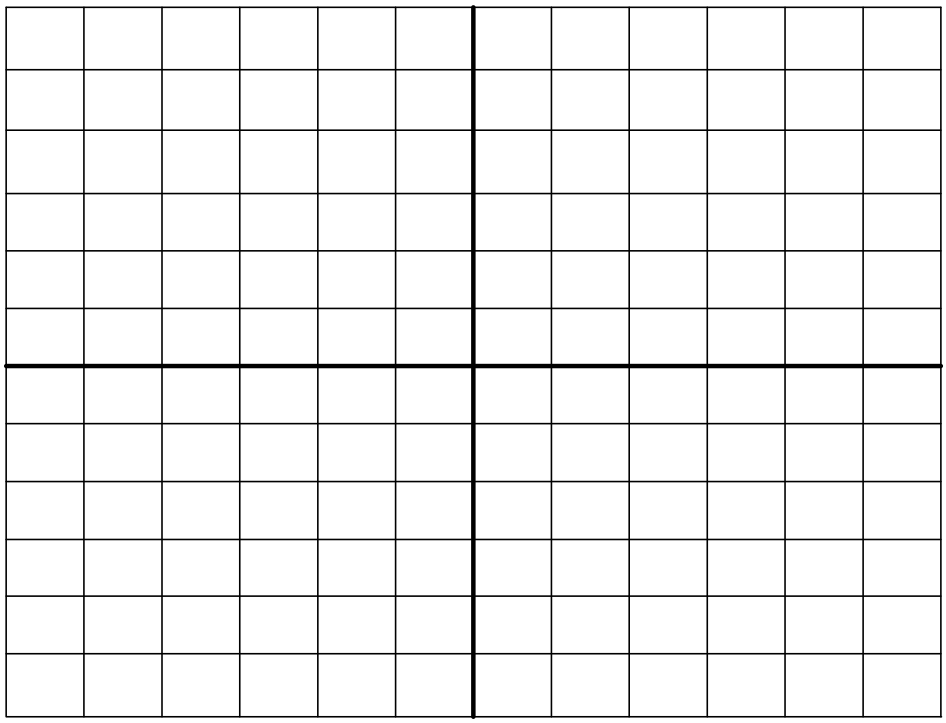

Figure 4

PLO1	CLO5	..... / 2 m

Compare and write a conclusion based on the result of **Table 2, Figure 3** and **Figure 4.**

_____

_____

_____

_____

_____

_____

_____

PLO1	CLO5	..... / 3 m

PART C: 180° Phase Control Circuit, C = 1 μF

Minimum firing angle (Calculated) C = 1 μF	Resistance of potentiometer (kΩ) (Measured) C = 1 μF

Table 3

PLO1	CLO5	..... / 1 m

Sketch and label the waveform of point A and B **(Minimum firing angle), C = 1 μF**

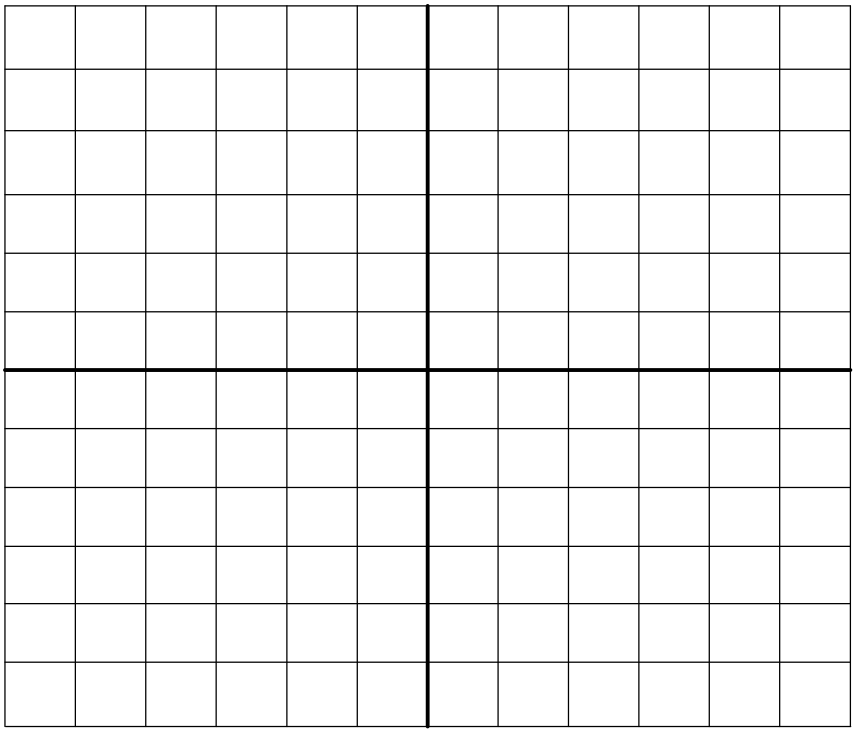

Figure 5

PLO1	CLO5	..... / 3 m

Sketch and label the waveform of point A and C **(Minimum firing angle), C = 1 μF**

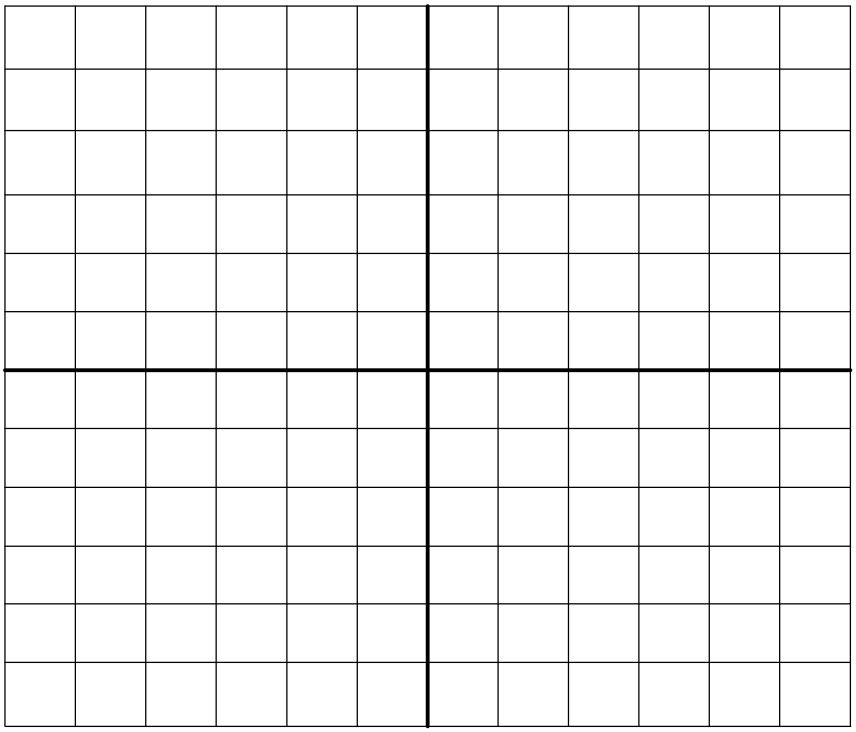

Figure 6

PLO1	**CLO5**	**…….. / 2 m**

Compare and write a conclusion based on the result of **Table 3, Figure 5** and **Figure 6.**

_____
_____
_____
_____
_____
_____
_____

PLO1	**CLO5**	**…….. / 3 m**

Maximum firing angle (Calculated) C = 1 μF	Resistance of potentiometer (kΩ) (Measured) C = 1 μF

Table 4

PLO1	CLO5	..... / 1 m

Sketch and label the waveform of point A and B **(Maximum firing angle), C = 1 μF**

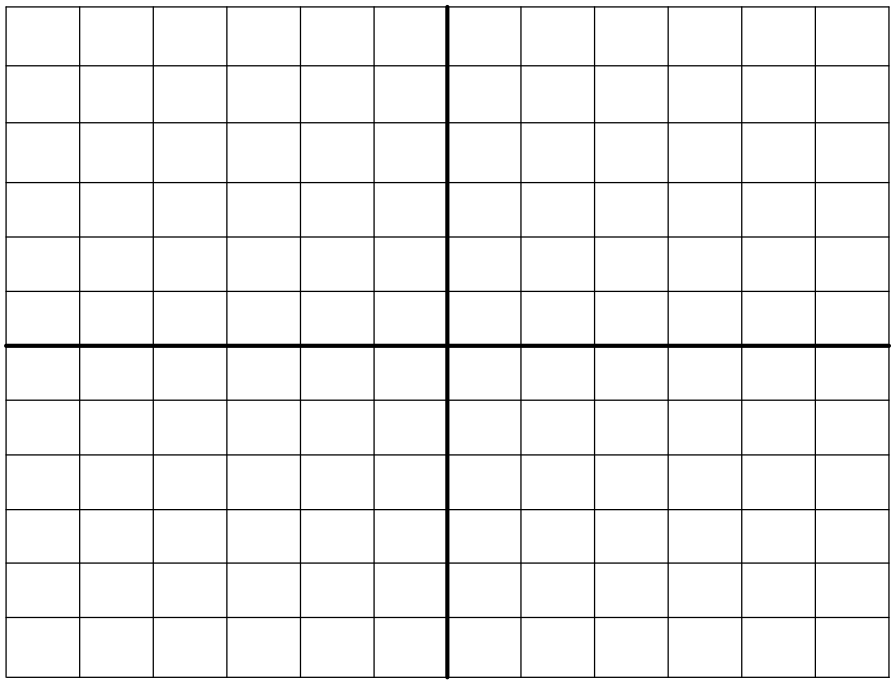

Figure 7

PLO1	CLO5	..... / 3 m

Sketch and label the waveform of point A and C **(Maximum firing angle), C = 1 μF**

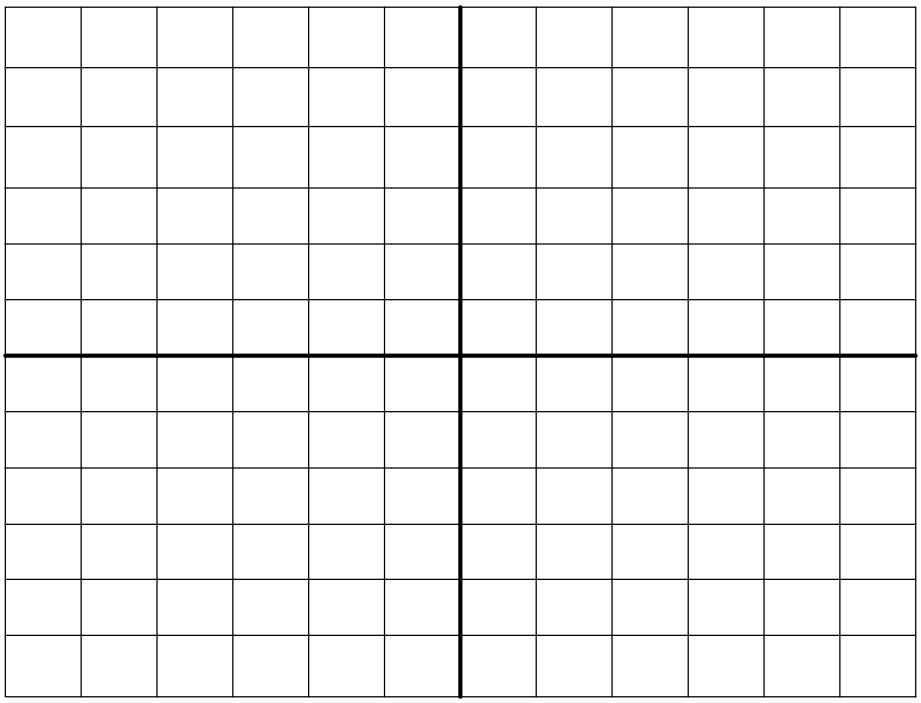

Figure 8

PLO1	CLO5	..... / 2 m

Compare and write a conclusion based on the result of **Table 4, Figure 7** and **Figure 8.**

_____

_____

_____

_____

_____

_____

_____

PLO1	CLO5	..... / 3 m

PART C: 180° Phase Control Circuit, C = 10 μF

Minimum firing angle (Calculated) C = 10 μF	Resistance of potentiometer (kΩ) (Measured) C = 10 μF

Table 5

PLO1	CLO5	..... / 1 m

Sketch and label the waveform of point A and B **(Minimum firing angle), C = 10 μF**

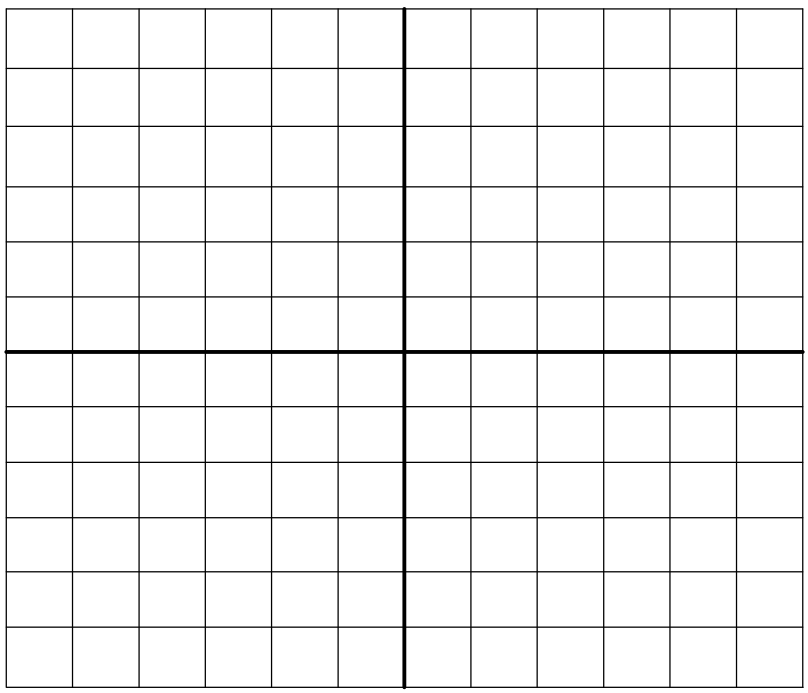

Figure 9

PLO1	CLO5	..... / 3 m

Sketch and label the waveform of point A and C **(Minimum firing angle), C = 10 μF**

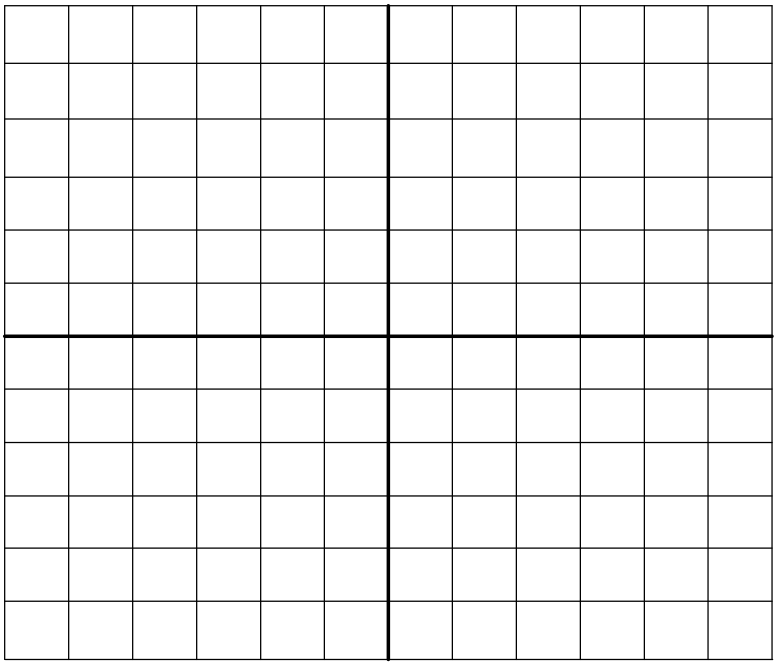

Figure 10

PLO1	CLO5	..... / 2 m

Compare and write a conclusion based on the result of **Table 5, Figure 9** and **Figure 10.**

_____

_____

_____

_____

_____

_____

_____

PLO1	CLO5	..... / 3 m

Maximum firing angle (Calculated) C = 10 μF	Resistance of potentiometer (kΩ) (Measured) C = 10 μF

Table 6

PLO1	CLO5	..... / 1 m

Sketch and label the waveform of point A and B **(Maximum firing angle), C = 10 μF**

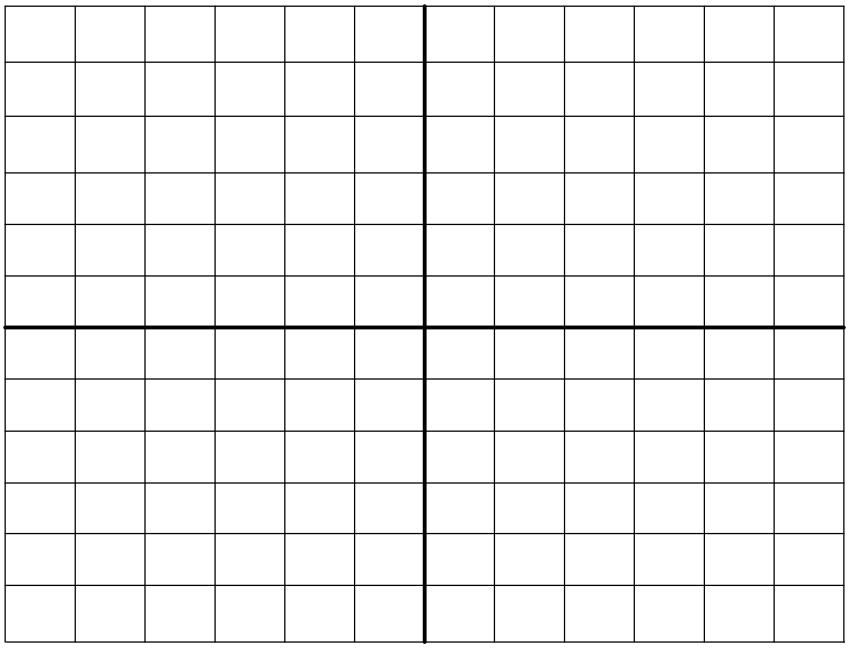

Figure 11

PLO1	CLO5	..... / 3 m

Sketch and label the waveform of point A and C **(Maximum firing angle), C = 10 μF**

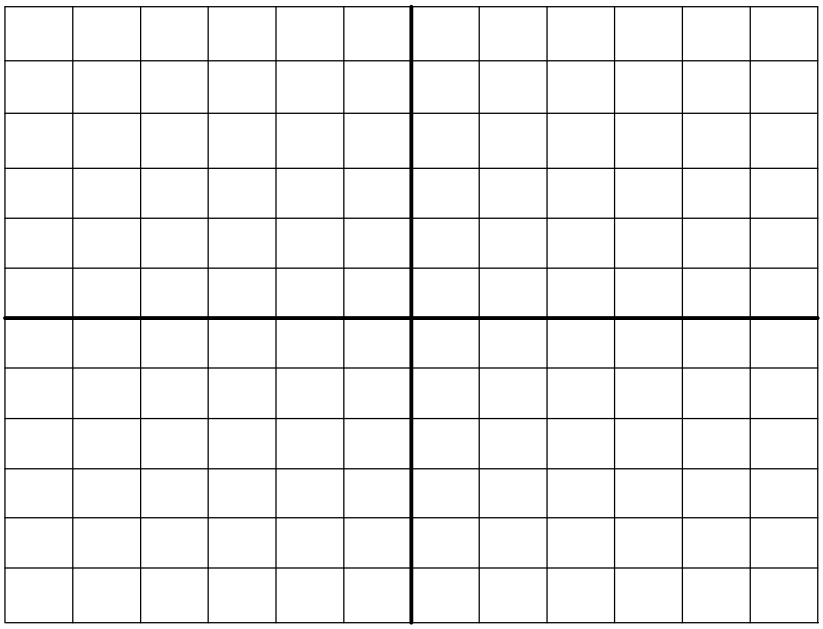

Figure 12

PLO1	CLO5	..... / 2 m

Compare and write a conclusion based on the result of **Table 6, Figure 11** and **Figure 12.**

_____

_____

_____

_____

_____

_____

_____

PLO1	CLO5	..... / 3 m

PLO2 (Psychomotor/Hands on Skill)

Criteria	Very poor (5 Marks)	Poor (10 Marks)	Moderate (15 Marks)	Good (20 Marks)	Excellent (25 Marks)
Ability to perform lab works based on the manual/ guidelines provided	Not at all	Quite Limited /Selectively	Can perform lab work moderately but require a lot of guidance	Can perform lab work systematically and only need minor guidance	Demonstrate systematic and excellent performances
Ability to perform simple lab work without supervision	Need full supervision	Major supervision	Minor supervision	Limited supervision	Work independently With no supervision
Ability to carry out lab work efficiently on the following criteria, (circuit assembly, using measurement apparatus and techniques)	Not able to construct a full circuit, poor/inaccurate measurement techniques/usage of equipment	Completed full circuit but poor/inaccurate measurement techniques/usage of equipment	Completed full circuit and it works successfully. However the measurement techniques/usage of equipment had some minor deficiency	Completed full circuit and it works successfully. However the measurement techniques/usage of equipment had produced a few errors/corrections.	Circuit was completed and works properly without any errors /corrections. Also demonstrated an excellent skills/conducts.
Ability to collect the required data, performs appropriate analysis and/or troubleshooting (if necessary).	Not able to collect data and/or perform analysis	Limited data collection but not able to perform analysis/ troubleshooting	Demonstrates major errors in data collection and /or analysis. Limited ability in troubleshooting	Minor error in data collection and analysis. Good approach/techniques in troubleshooting.	Data collection and data analysis are done systematically and performs excellent approaches to trouble shoot (if necessary)

PLO4 for Laboratory Report

Criteria	VERY POOR (5)	POOR (10)	MODERATE (15)	GOOD (20)	EXCELLENT (25)
Data Collection	No data reported.	Data is brief and missing significant pieces of information .	Incomplete these of components of data (Both tables and Graphs): • _____Tables • _____Graphs	Only one component of data is incomplete (either table or graph). • Tables/Graphs	Data is completed properly and attributes mentioned below are observed with great care: • Tables are easy to read and units are provided. • Graphs are labeled and shown trends.
Completing/ Answering Questions	Questions are not answered at all.	Attempts were made but gave wrong answer to every question.	Questions are answered without any depth and with many errors.	Questions are properly answered but with a few errors.	Questions are answered completely and correctly.
Summary/ Conclusion	No conclusion or summary is/are drawn/reported	Conclusion is too brief without any reference to important pieces of information	Any two components of the conclusion/summary (mentioned) are missing : • Summary • Data • Hypothesis • Errors	Any component of the conclusion /Summary (mentioned) is missing: • Summary • Data • Hypothesis • Errors	Conclusion /Summary of these attributes below were addressed/reported properly, clearly and systematically. • experiment, • data cited • hypothesis/assumptions made • The source of errors.
Report Quality	No attention to detail evident.	Report contains many errors.	Report is good but with few spelling or grammatical errors.	Report is well written and cohesive, with a few errors	Report is very well written without any spelling or grammatical mistakes.

PLO8

Criteria	Very poor (5 Marks)	Poor (10 Marks)	Moderate (15 Marks)	Good (20 Marks)	Excellent (25 Marks)
Professional Practice (Punctuality/Follow the Rules)	Non-Conforming/ Not punctual	Not always Conforming/ Not always punctual	Sometimes Conforming/ Sometimes punctual	Conforming /Punctual	Always Conforming /Always Punctual
Ethical Conduct/Behaviour (Trustworthy / Respectfulness)	Does not practice	Not always practicing	Sometimes only	Mostly practicing	Always practicing
Social Cultural (Racial Harmony)	Does not observe	Not always observe	Sometimes observe	Mostly observe	Always observe
Personality	Mostly unpleasant	Not always pleasant	Moderately pleasant	Mostly pleasant	Always pleasant